APULIA
EVENT SOLUTION

CATALOG

Premier Collection

Who we are

At Apulia Event, we've been in the wedding and event equipment rental business for years, and we're committed to making everything as simple and personalized as possible for our clients.

Why choose our rental service

Flexibility and customization, Economic savings, Logistical convenience, environmental sustainability

What we can offer you

Furniture and accessories, Lighting, Tableware and decorations, Custom accessories

Why choose us

Experience and passion, Rich and varied portfolio, Dedicated customer service, Transparent pricing, Commitment to sustainability

mise en place

The APULIA **EVENT SOLUTION catalog** offers **an exclusive selection** of refined and contemporary **table settings ,** elegant **furnishings ,** and catering **equipment .**

Each piece is carefully chosen to add atouch of sophistication and make every **event *truly* personalized.**

furnishing & decor

How to order items

CONTACT AND SHARING THE IDEA

After contacting us, you can request items by indicating the code or describing the type of event: we will help you select the collections and products best suited to your concept.

TRANSPORT AND LOGISTICS STUDY

For Apulia Event Solution, the delivery phase is not limited to the simple transport of equipment, but represents atrue complete logistics and set-up service, designed to offer our customers a completely worry-free experience.

PRACTICAL TECHNICAL SUPPORT

Our team is made up of experienced, competent and collaborative people, who have been working in the world of events for many years and who can be an excellent support

EVENT ASSISTANCE

Upon request, we can offer assistance throughout the event.

Our team of specialized technicians is always present and operational, ready to intervene at every stage—from initial preparation to the conclusion of the event—ensuring flawless use of all equipment.

Index

TABLES
p. 6

COCKTAIL TABLES
p. 11

CHAIRS AND STOOLS
p. 12

AUTERPLATES AND DISHES
p. 19

SILVERWARE
p. 30

GLASSES AND CARAFES
p. 38

TABLE LINEN
p. 45

LIVING ROOMS
SOFAS AND ARMCHAIRS
p.49

POUF
p. 56

COUNTERS AND BUFFETS p. 61

CARPET
p. 64

CUSHIONS
p. 66

BRIGHT FURNISHINGS
p. 69

FURNISHING ACCESSORIES
p. 72

UMBRELLAS
p. 76

GLASS CYLINDERS
p.79

KITCHEN EQUIPMENT
p. 80

COVERINGS
p. 86

HEATING
p. 87

CONTACTS
p. 88

tables

Dinner tables

TV008 - PROVENCE HONEY TABLE 240x120 cm

TV017 - HONEY TABLE WITH ARCHITECT AND LIGHTS 220x100x225 cm (L x W xH)

TV019 - PROVENCE HONEY TABLE ø180 cm

Dinner tables

TV001 - CLICK TABLE 200x90 cm
TV005 - CLICK TABLE 200x122 cm

TV002 -CLICK TABLE ø120 cm
TV006 -CLICK TABLE ø160 cm
TV007 -CLICK TABLE ø180 cm

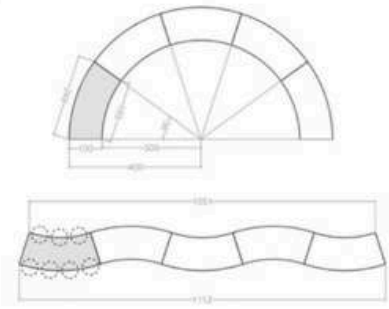

TV010 -SERPENTINE TABLE 200x100 cm

Dinner tables

TV012 - MANGO TABLE 160X90 cm

TV015 - VIENNA TABLE ø120 h 77 cm

TC017 -COUNTRY TABLE 55x55 h70 cm

TV003 - OLIVE TABLE 75x75 cm

Tables

TV004 -BAMBOO BISTRO TABLE
ø 60 h75 cm

TV018 - PAVIA BLUE TABLE
ø70 xh 76 cm

TV016 -BELLE EPOQUE WHITE TABLE
IN IRON ø70 xh 76 cm

TV014 - PRESTON MODEL OVAL TABLE
100x80 h 35 cm

TV013 -COUNTRY COFFEE TABLE
120x60 h40 cm

Cocktail Tables / Lounge

novelty

TVC003- BAMBOO COCKTAIL TABLE
h105-ø70 cm

TVC001- COCKTAIL TABLE
TONDO WHITE ø60-h110 cm

TVC005 - DUBAI BASE COCKTAIL TABLE
WHITE WOODEN TOP - ø60 cm, h105 cm

TVC004- COCKTAIL TABLE
TRIESTE WHITE ø60-h90 cm

TVI002 - COCKTAIL TABLE
WHITE IRON
66 x 66 - h110 CM

TVI003 - COCKTAIL TABLE
IRON Black
66 x 66 - h110 CM

TVC002- COCKTAIL TABLE
CLICK 80 x h110 cm

seats & stools

seats

& stools

Seats

SD003 -MATHILDE CHAIR

SD013 - THONE CHAIR

SD002 -GOYA CHAIR

SD012 - CHAIR
COUNTRY FOLDING

SD004 -TRULLETTO CHAIR

SD014 - PAVIA BLUE CHAIR

Seats

novelty

SD006 -BAMBOO CHAIR

SD015 - BAMBOO DIRECTOR'S CHAIR
COLOR MOCHA BROWN

SD001 -MASSERIA CHAIR

SD009 - PARISIAN CHAIR

SD005 - CHAIR
WHITE CHIAVARINA

SD010 -CHAIR
WHITE BELLE EPOQUE

SD011 - GHOST CHAIR

Chairs and Stools

SG005 - FARMHOUSE STOOL

TCI001 - IRON STOOL
WHITE 30x30 H75

TCI002 - IRON STOOL
BLACK 30x30 H75

SG003 - TRIESTE STOOL
WHITE H 74CM

SG002 - STOOL
GHOST H 75CM

Chairs and Stools

novelty

SG006 - BALI STOOL
RATTAN AND TAPIOCA h65

PC002 -ADALIA WOODEN BENCH
WITH WHITE GARDENIA CUSHION -190cm -h38cm

SG008 - MAJORCA STOOL
WHITE GARDENIA -h75cm

SG008 - MAJORCA STOOL
GRAPHITE GREY - h75cm

SG001 - STOOL
BAMBOO h75cm

SG004 -PAINTER'S STOOL
ADJUSTABLE HEIGHT FROM 63 -74CM

placemats & plates

Floral

SP005 - PURPLE FLORAL PLATE ø32

PP004 -PURPLE FLORAL BREAD PLATE ø17

SP004 - GREEN FLORAL TABLE MAT ø32

PP003 -GREEN FLORAL BREAD PLATE ø17

Ralph

- Made of
- wood, perfect for setting up in the
- countryside, castles and historic houses

SPR002 - RALPH TABLE MAT
IN WALNUT COLORED WOOD ø33 cm

SPR001 - RALPH TABLE MAT
IN WHITE CLAY COLOR WOOD ø33 cm

Camille

Finezza

PP014 -CAMILLE BREAD PLATE ø17

SP002 -CREAM COLORED FINEZZA PLATE ø33

SP012 - CAMILLE PLATE ø32 cm

PP001 -CREAM COLORED FINEZZA BREAD PLATE ø15

Flower

SPF001 - RATTAN PLATE
IVORY FLOWER ø40 cm

Sesame

SP001 - SESAME PLATE ø37

Midollino

SP013 - DARKWICKERPLATEØ32cm

Gold and Baroque Glass

- Transparent
- with gold thread or worked

SP006 -GOLD GLASS PLATE ø32

PP005 - GOLD GLASS BREAD PLATE ø15

SP003 - BAROQUE GLASS AUGER PLATE ø32

PP002 -BAROQUE GLASS BREAD PLATE ø16
-

Grottaglie

- Typical Apulian Grottaglie ceramics, 5
- coloursasindicatedbelow,placematsand bread plates available

SP007 -GROTTAGLIE GREEN PLATE ø32

pp006 -GROTTAGLIE GREEN BREAD PLATE ø15

SP008 -GROTTAGLIE WHITE PLATE ø32

pp007 -GROTTAGLIE WHITE BREAD PLATE ø15

SP009 -GROTTAGLIE TERRACOTTA PLATE ø32

pp008 -GROTTAGLIE TERRACOTTA BREAD PLATE ø15

SP010 -GROTTAGLIE TURQUOISE ø32 PLATE

pp009 -GROTTAGLIE TURQUOISE BREAD PLATE ø15

SP011 -GROTTAGLIE YELLOW ø32 PLATE

pp010 -GROTTAGLIE YELLOW BREAD PLATE ø15

Venice

- White ceramic
- Smooth, ideal in all situations

VN001 - VENEZIA TABLE MASTERPLATE ø32

VN002 - VENICE FLAT PLATE ø27

VN003 - VENICE DEEP PLATE ø23

VN004 - VENICE DESSERT PLATE ø20

VN005 - VENICE BREAD PLATE ø16

VN006 - VENICE COFFEE CUP

VN007 - VENICE COFFEE SAUCER

CP001 - MARQUIS PRIEST'S HAT ø27

Paris

- White ceramic with hemmed edge
- Timeless line

SPP001 - ø32 PARIS PLATE

SPP004 - FLAT PLATE ø28 PARIS

SPP003 - BREAD PLATE ø16 PARIS

SPP002 - DESSERT PLATE ø21.5 PARIS

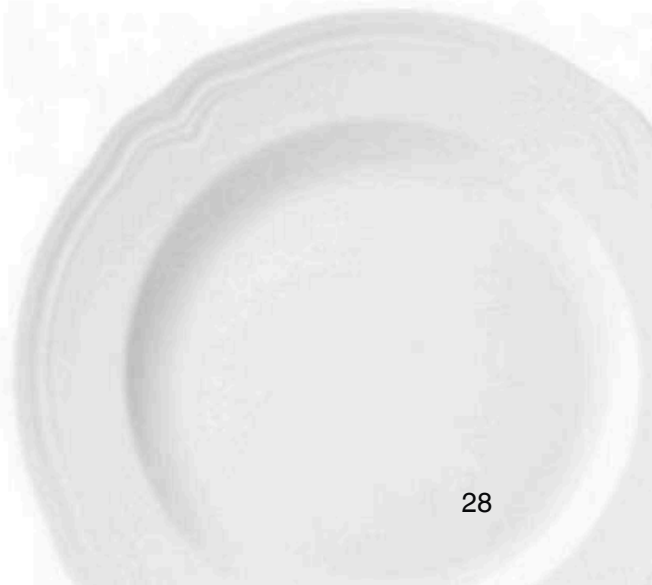

Rooster

- classic Apulian design
- suitable for the village festival

PP11 -TERRACOTTA ROOSTER FLAT PLATE ø24

PP12 -TERRACOTTA DEEP PLATE WITH ROOSTER ø23

PP13 -TERRACOTTA ROOSTER FLAT PLATE ø19

silverware

Rame Florence

- modern copper-
- colored style

SFR001 - TABLE KNIFE
FLORENCE RAME

SFR002 - TABLE FORK
FLORENCE RAME

SFR003 -TABLE SPOON
FLORENCE RAME

Linear Steel

- modern and minimal
- completely in steel

SPL001 -FORK
LINEAR TABLE

SPL002 -KNIFE
LINEAR TABLE

SPL003 -SPOON
LINEAR TABLE

SPL004 -FORK
LINEAR FRUIT

SPL005 -KNIFE
LINEAR FRUIT

SPL006 -SPOON
LINEAR DESSERT

SPL007 -TEASPOON
THE LINEAR

Serbelloni Steel

- Classic Broggi line
- Highest quality steel

SCC001 -SERBELLONI STEEL TABLE KNIFE

SCC002 - SERBELLONI STEEL TABLE FORK

SCC003 - SERBELLONI STEEL TABLE SPOON

SCC004 - SERBELLONI STEEL FISH KNIFE

SCC005 - SERBELLONI STEEL FISH FORK

SCC006 - SERBELLONI STEEL FRUIT FORK

SCC007 - SERBELLONI STEEL FRUIT KNIFE

SCC008 - SERBELLONI STEEL FRUIT SPOON

SCC009 - SERBELLONI STEEL TEA SPOON

Serbelloni Silver

- Classic Broggi line
- Polished silver knife with steel blade

SRG001 -TABLE KNIFE
SERBELLONI SILVER

SRG002 - TABLE FORK
SERBELLONI SILVER

SRG003 -FRUIT FORK
SERBELLONI SILVER

SRG004 - FRUIT KNIFE
SERBELLONI SILVER

SRG005 - FRUIT SPOON
SERBELLONI SILVER

Imperial Gold

- classicgold lacqueradds
- elegance to the table

SMP001 - TABLE KNIFE
IMPERIAL GOLD

SMP002 - TABLE FORK
IMPERIAL GOLD

SMP003 - TABLE SPOON
IMPERIAL GOLD

Bamboo steel

- bamboo handle, satin
- steel upper part

SPB002- KNIFE
BAMBOO STEEL TABLE

SPB001- FORK
BAMBOO STEEL TABLE

SPB003- SPOON
BAMBOO STEEL TABLE

SPB004- TEASPOON
TEA BAMBOO STEEL

“Amalfi”

- ceramic handle, steel
- upper part

novelty

“Amalfi” Terracotta

SPT002
TABLE KNIFE
STEEL AND CERAMIC
TERRACOTTA AND WHITE

SPT001
TABLE FORK
STEEL AND CERAMIC
TERRACOTTA AND WHITE

SPT003
TABLE SPOON
STEEL AND CERAMIC
TERRACOTTA AND WHITE

SPT004
TEA SPOON
STEEL AND CERAMIC
TERRACOTTA AND WHITE

“Amalfi” Beige

SPM002
TABLE KNIFE
STEEL AND CERAMIC
BEIGE TAPIOCA AND MOKA

SPM001
TABLE FORK
STEEL AND CERAMIC
BEIGE TAPIOCA AND MOKA

SPM003
TABLE SPOON
STEEL AND CERAMIC
BEIGE TAPIOCA AND MOKA

SPM004
TEA SPOON
STEEL AND CERAMIC
BEIGE TAPIOCA AND MOKA

glasses

glasses

Melody

classic andelegantstyle
Italian production

novelty

ML001 -MELODY WATER TUMBLER
ML002 -MELODY WHITE WINE GLASS
ML003 -MELODY RED WINE GLASS
ML004 -FLUTE MELODY

Adagio

AD001 -ADAGIO WATER TUMBLER
AD002 -ADAGIO WHITE WINE GLASS
AD003 -ADAGIO RED WINE GLASS
ML004 -FLUTE ADAGIO

Timeless

TM001 - TIMELESS WATER TUMBLER

TM002 - TIMELESS WHITE WINE GLASS

TM003 - TIMELESS RED WINE GLASS

TM004 - TIMELESS FLUTE

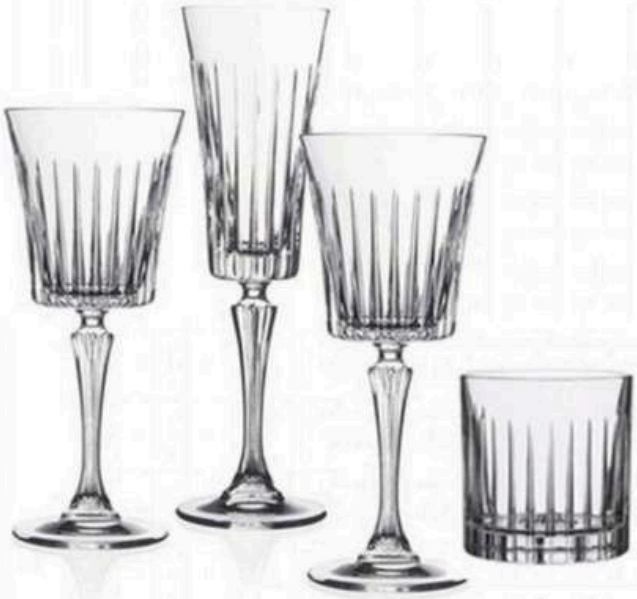

BR001 - JUG
TIMELESS ML 1200

BR002 - CARAFE
TIMELESS ML 100

Timeless Gold Thread

TMO001 -WATER TUMBLER
TIMELESS GOLD THREAD

TMO002 -WHITE WINE GLASS
TIMELESS GOLD THREAD

TMO003 -RED WINE GLASS
TIMELESS GOLD THREAD

TMO004 -TIMELESS FLUTE GOLD THREAD

Essential

modern and linear

Italian production suitable for any type of event

SS001 - ESSENTIAL WATER TUMBLER

SS002 - ESSENTIAL WHITE WINE GLASS

SS003 - ESSENTIAL RED WINE GLASS

SS004 -FLUTE ESSENTIAL

Invino

NV001 -INVINO WATER TUMBLER

NV002 -INVINO WHITE WINE GLASS

NV003 -RED WINE GLASS ROSSO INVINO

NV004 -WINE FLUTE

Solange

BC005 -SOLANGE GREEN GLASS

BC008 -SOLANGE GREEN TUMBLER

BC006 - SOLANGE AMBER GLASS

BC009 - SOLANGE AMBER TUMBLER

BC007 -SOLANGE PURPLE GLASS

BC010 -SOLANGE PURPLE TUMBLER

Champagne Glass

ideal for enjoying sweet sparkling wines
used for champagne towers

BC014 - CHAMPAGNE CUP

BC016 - TIMELESS CHAMPAGNE CUP

novelty

Tumbler

BC017 - TOCAI TUMBLERINO CL7

Tiki

Tumbler for collectors
Ideal for serving tropical cocktails

TK004
- TIKI PULCINELLA

TK002
- TIKI ETRURIA

TK003
- TIKI VENICE

TK001
- TIKI SARDINIA

ALL TIKI GLASSES HAVE A CAPACITY OF 45 CL

tablecloths

Tablecloths

1 - Flamed white:

- TVS01 - ROUND TABLECLOTH IN FLAMED WHITE ø340 cm
- TVS02 - FLAMED WHITE TABLECLOTH 230x230 cm TVS03 -
- FLAMED WHITE TABLECLOTH 400x280 cm TVS04 - FLAMED
- WHITE TABLECLOTH 500x230 cm TVS05 - FLAMED WHITE
- TABLECLOTH 340x340 cm TVS06 - FLAMED WHITE
- TABLECLOTH 300x230 cm TVS08 - FLAMED WHITE RUNNER
- 50x230 cm TVS09 - FLAMED WHITE NAPKIN 50x50 cm
-

2 - White linen blend:

- TVS10 - ROUND WHITE LINEN MIX TABLECLOTH ø340 cm
- TVS11 - WHITE LINEN MIX TABLECLOTH 230x230 cm TVS12
- - WHITE LINEN MIX TABLECLOTH 500x230 cm TVS13 -
- WHITE LINEN MIX TABLECLOTH 300x230 cm TVS14 -
- WHITE LINEN MIX NAPKIN 50x50 cm

3 - Pink crystal:

- TVS15 - PINK CRYSTAL NAPKIN 50x50 cm

Tablecloths

4 - Champagne

- TVS16 - CHAMPAGNE ROUNDTABLECLOTH ø340
- TVS17 - CHAMPAGNE TABLECLOTH 230x230 cm
- TVS18 - CHAMPAGNE TABLECLOTH 500x230 cm
- TVS19 - CHAMPAGNE TABLECLOTH 300x230 cm
- TVS20 - CHAMPAGNE NAPKIN 50x50 cm

5 - Sky Crystal:

- TVS21 - LIGHT BLUE CRYSTAL NAPKIN 50x50 cm

6 - Cactus Crystal:

- TVS22 - CRYSTAL CACTUS NAPKIN 50x50 cm

7 - White cordonetto rush:

- TVS23 - ROUND TABLECLOTH CURVED RUSH B. ø340 cm
- TVS24 - RUSH TABLECLOTH COR. B. 230x230 cm TVS25 -
- RUSH TABLECLOTH COR. B. 500x230 cm TVS26 - RUSH
- TABLECLOTH COR. B. 340x340 cm TVS27 - RUSH
- TABLECLOTH COR. B. 300x230 cm TVS28 - RUNNER COR.
- B. 50x230 cm TVS29 - RUSH NAPKIN COR. B. 50x50 cm
-

8 - Rush:

- TVS30 - ROUND RUSH TABLECLOTH ø340 cm
- TVS31 - RUSH TABLECLOTH 230x230 cm
- TVS32 RUSH TABLECLOTH 500x230 cm TVS33
- - RUSH TABLECLOTH 340x340 cm TVS34 -
- RUSH TABLECLOTH 300x230 cm TVS35 -
- RUNNER RUSH 50x230 cm TVS36 - NAPKIN
- 50x50 cm

TVS46 - TRUSH TABLECLOTH 400X280 cm

9 - White Venus flax:

- TVS37 - ROUND VENUS WHITE TABLECLOTH ø340 cm
- TVS38 - WHITE VENUS TABLECLOTH 230x230 cm
- TVS39 - WHITE VENUS NAPKIN 50x50 cm

10 - Black Iris:

- TVS40 - BLACK IRIS ROUND CLOTHING ø340 cm
- TVS41 - BLACK IRIS TABLECLOTH 230x230 cm
- TVS42 - BLACK IRIS NAPKIN 50x50 cm

Tablecloths

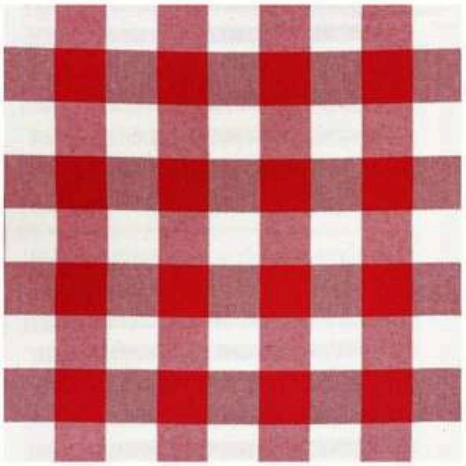

TVS043 - RED AND WHITE SQUARE PICNIC-STYLE RUNNER 40x300 cm

TVS044 - RED AND WHITE SQUARE PICNIC STYLE NAPKIN 50x50 cm

TVS045 - CREAM POUF COVER 50x50x30

Molleton

MOLLETTONE FOR ROUND TABLE

MOL001 -ROUND TABLE COVER ø180 cm

haloes

sofas & armchair

sofas

Bamboo

SL001 -BAMBOO LIVING ROOM (SOFA + 2 ARMCHAIRS + COFFEE TABLE)

Preston

SL002 -PRESTON LIVING ROOM (SOFA + 2 ARMCHAIRS + COFFEE TABLE)

White Belle Epoque living room

SL004 -BELLE EPOQUE WHITE LIVING ROOM (SOFA +2 ARMCHAIRS +COFFEE TABLE)

Pavia Blue Bench

PC001 - PAVIA BLUE BENCH - 146x50x107 cm (LxWxH)

Paris

elegant and discreet,
ideal for ancient residences

PL001 -PARIS ARMCHAIR

DV001 -PARIS SOFA

Petal

DV002 -PETAL SOFA

PL002 -PETAL ARMCHAIR

IBERIAN LIVING ROOMS

elegant and adaptable to any eventuality

novelty

SL007 - VALENCIA BEIGE LINEN LIVING ROOM

SL006 -VALENCIA LIVING ROOM COLOR OLIVE GREEN

SL005 - MARBELLA TERRACOTTA LIVING ROOM

Preston

DV003 - PRESTON SOFA 210x76x63 (L x W x H)

PL003 - PRESTON ARMCHAIR 75x76x63 (L x W x H)

Rattan armchair

CA003 - RATTAN ARMCHAIR

pouf

pouf

Paris Pouf

PF001 - PARIS 2-SEATER POUF

PF002 - PARIS POUF

Texas Pouf

PF003 - TEXAS POUF h48

PF004 - TEXAS POUF h25 ø50 CM

Flower

PF005 - EMBROIDERED FLOWER POUF (55x55x20 cm)

Rhombus

PF006 - RHOMBUS EMBROIDERED POUF (55x55x20 cm)

Karaw

PF007 - KARAW POUF (50x50x35 cm)

Gopi

PF008 - GOPI POUF (50x50x30 cm)

Saron

PF009 - POUF SARON (50x50x30 cm)

Deepor

PF010 - DEEPOR POUF (50x50x30 cm)

Beel

PF011 - BEEL POUF (50x50x30 cm)

Thondi

PF012 - POUF THONDI (50x50x50 cm)

counters

buffet

Olive Grove Bancarella

BANC001 -OLIVE GROVE STALL
300x75 CM
COMPLETE WITH STAIRS AND ARCHITECT

Country

BN001 -COUNTRY STALL
150X70X120 (L,D,H)

White Bancarella Masseria

BN001 - WHITE MASSERIA STALL 200x75 (L,W)

Honey stall with architrave

TV017 -HONEY TABLE WITH ARCHITECT AND LIGHTS -
DIMENSIONS 220x100x225 cm (L x W x H)

Vintage Cart

CV001 - VINTAGE CART 160x100x77 cm (LxWxH)

carpet

Carpets

elegant and refined
enriches every furnishing

TP003
VINTAGE CARPET
GREY 160x220

TP002
VINTAGE CARPET
BLUE 160x220

TP004
VINTAGE CARPET
MULTICOLOR 160x213

TP001
TEXAS CARPET
200 X300

TP005
VINTAGE CARPET
ORIENTAL 160x213

cushion

Cushions

CS003 - TEXAS JUTE PILLOW 40X40

CS001 -GREEN LADY PILLOW 50X50

CS010 - NATURAL WHITE PILLOW 50X50

CS002 -NATURAL WHITE PILLOW 50X50

CS009 - WHITE AND RED PILLOW
30 x 30 cm

CS008 -CYLINDRICAL CUSHION
WHITE AND RED 60 cm x ø 15 cm

Cushions

CS006 - HAZELNUT PINK CUSHION 45X45

CS007 - BEIGE LINEN CUSHION 45X45

CSS002 - CHAIR CUSHION ø35 cm
LIGHT GREY / BEIGE

CS005 - CELADON PILLOW 45X45

CSS004 -50x50 cm LIGHT GREY/BEIGE LIVING ROOM CUSHION

CSS003 - CHAIR CUSHION 36x32 cm
LIGHT GREY / BEIGE

bright furnishing

Chandeliers

IP001 -CHANDELIER WITH SWAROVSKI

IP002 - EMPIRE CHANDELIER

IP003 -WICKER CHANDELIER
h 34cm x ø 36cm

IP004 - RATTAN CHANDELIER
h 27 cm xø 45 cm

Lamps

lasting 4/6 hours

IL001 - GOLD TABLE LAMP 8X34

IL002 -CRYSTAL TABLE LAMP 8X24

IL004 - ALEXIS TABLE LAMP
TERRACOTTA COLOR
h27cm - ø7,8cm - LAMP ø15cm

novelty

IL003 -ALEXIS TABLE LAMP
BEIGA TAPIOCA COLOR
h27cm -ø7.8cm -LAMP ø15cm

furnishing accessories

For the table, buffet and room service

VST001 - TRAY WITH SHOULDER STRAP

CPT001 -PICNIC BASKET

PTV005 -NAPKIN RING
IN RATTAN

PTV006 - NAPKIN HOLDER

PSI005 - JUTE BASKET 30X30X35CM

CPR009 -RATTAN WASTE BASKET

For table, buffet and room service

CVP001 - PAINTER'S EASEL
156-172x60x102cm

TPP001 -PING PONG TABLE

SGP001 -PLASTIC HIGH CHAIR
WITH SEAT BELT

TDF001 - STEEL TENDIFLEX
3M RED TAPE

BCC060 -CORTEN BRACER
ø60 cm h17 cm

For the table, buffet and room service

PTV007 - HALF BARREL BOTTLE HOLDER

VS001 - ROUND STEEL TRAY ø38cm

SPU002 - STEEL CHAMPAGNE BOWL
52x40x29.5cm (LxWxH) -COPPER FINISH

SPU001 -STEEL CHAMPAGNE BOWL
50x35x24.5cm (LxWxH) -SILVER FINISH

umbrellas

Outdoor

novelty

OMB001
UMBRELLA WITH FRINGES ø186cm

OMB005
UMBRELLA
YELLOW ø175cm

OMB006
UMBRELLA
BLACK AND BEIGE

ø260cm

OMB004 -TAPIOCA UMBRELLA ø175cm

OMB002 - ORANGE PEACH UMBRELLA ø175cm

OMB003 - GREEN UMBRELLA ø175cm

BMB001 - UMBRELLA BASE
COLOR TAPIOCA ø50cm - 25KG

Outdoor

OMB007 - 3x3m UMBRELLA WITH ALUMINUM SIDE POLE AND POLYESTER COVER

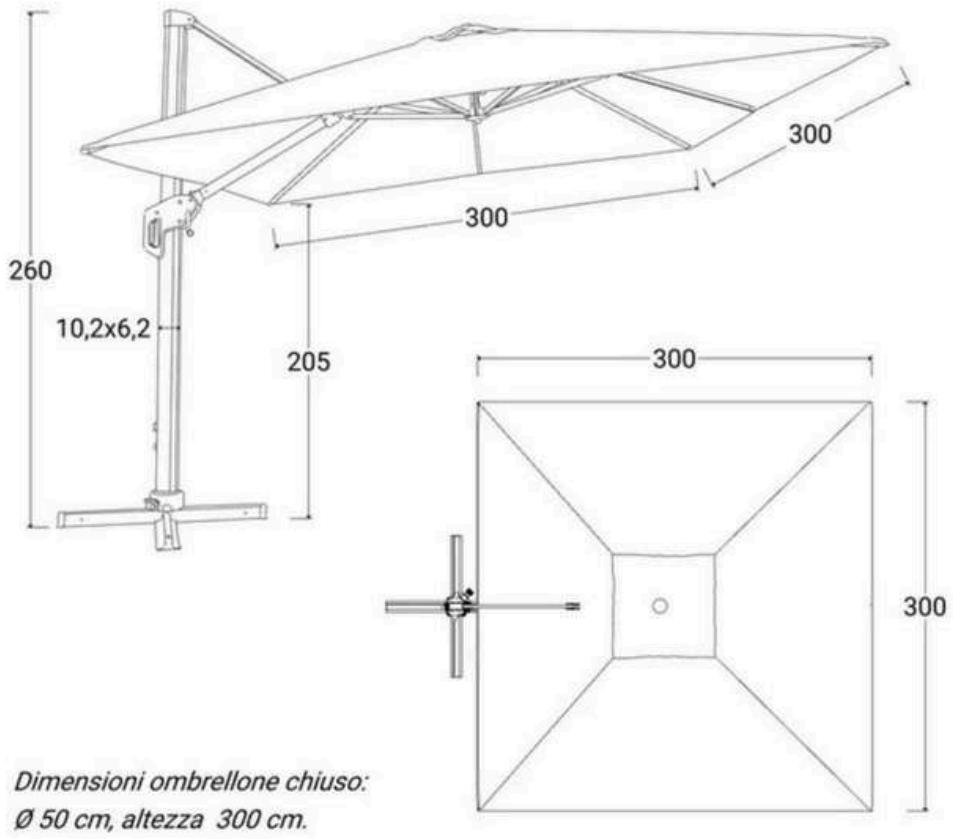

Cylinders

for centerpiece arrangements
suitable for outdoor use

CL006
GLASS CYLINDER
h9 ø22cm

CL005
GLASS CYLINDER
h15 ø14cm

CL004
GLASS CYLINDER
20ø18cm

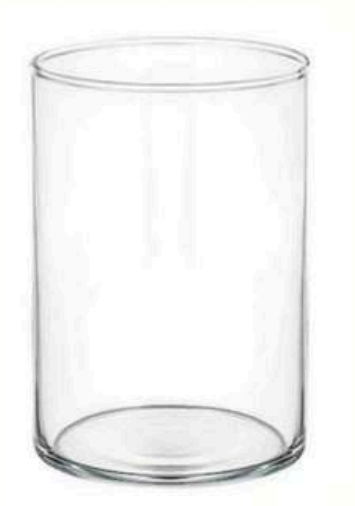

CL003
GLASS CYLINDER
h17 ø12cm

CL002
GLASS CYLINDER
h23 ø10cm

CL001
GLASS CYLINDER
h28 ø8cm

kitchen

equipment

Catering

CFRE001 - ELECTRIC OVEN 10 TRAYS 60x40,
GN 1/1, POWER ABSORPTION 12 KW

FRG001 - 11-TRAY GAS OVEN

CG002 - 6-BURNER GAS COOKER

CG001 - 4-BURNER GAS COOKER

Catering

CPG001 - 24L GAS PASTA COOKER KETTLE

CPG002 -40L GAS PASTA COOKER KETTLE

MC001 - WORKBENCH 60X180

FR003- FRGO DISPLAY CASE
VERTICAL Lt. 354 / 388

FR001 -
FRIDGE
DISPAY WINDOW
VERTICAL
And 400L

Catering

PRF001 - PLASTIC WASTE BIN
DIFFERENT COLORS

CPT001 -CATTELLO TRAY RACK
15 2/1 TRAYS

CDH001 - CHAFING DISH

SGB001 -ICE BUCKET
ø21 cm - h20 cm

ptz001 -SOUP COOKER

Catering

PT001 - INFRARED THERMAL BRIDGE

LSV001 -FOOD WARMER HEAT LAMP

PIN001 - 3.5 KW INDUCTION PLATE

GR001 -CHARCOAL GRILL

ALB001 - STAINLESS STEEL STAND Ø20 cm

UPPER, Ø25 cm LOWER,
HEIGHT 19 cm

Catering

FT001 - FOOD TRUCK

EQUIPMENT:

- 1 negative refrigerated counter with 2 doors
- 1 positive refrigerated counter with 1 door and 4 drawers
- Professional 7-tray oven
- 13-liter fryer
- 13-litre gas pasta cooker, 2 stainless steel baskets
- Professional 6-burner gas stove
- Static gas oven
- Professional single basin sink

Ape Foodtruck

ft002 - Ape Foodtruck

The vehicle is equipped with a sliding bench with accommodation for cooking accessories, cold storage and fryer. Furthermore, it has aback counter base with stainless steel top, sink with tank

Loading and unloading. The gas system and the hood smoke evacuation systems are certified and completely compliant.

TEF001 - STAINLESS STEEL GASTRONORM BAKING TRAY 1/1

Coverings

ideal for technical areas and field kitchens

GZ002 - FOLDING GAZEBO 4.5 X 3M

GZ001 - FOLDING GAZEBO 3 X 3M

Heating

RS001 - PYRAMID GAS STOVE h227

RS003 - AIR HEATER GENERATOR
2000 WATT, PTC CERAMIC, BLACK

contact

Giovanni + 39 377.3330116
Antony +39 351.3290126

info@apuliaevent.com
www.apuliaevent.com

contact